East timor communication solar battery cabinet

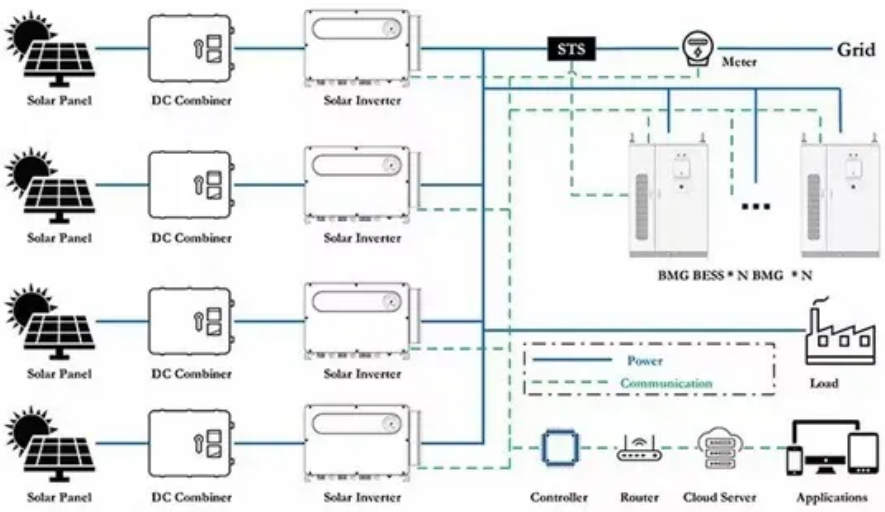

East timor communication solar battery cabinet

POWERSTAR BATTERY EQUIPMENT NEAR EAST TIMOR

This guide provides step-by-step instructions on how to install your R-BOX-OC outdoor solar battery cabinet, including site selection, assembly, wiring, and system testing. [pdf]

Get Price

EAST TIMOR SMART ENERGY STORAGE CABINET

Submit your inquiry about hybrid electric systems, solar panels, solar cells, inverters, and energy storage applications. Our solar experts will reply within 24 hours.

Get Price

Energy Storage Equipment, Energy storage solutions, Lithium battery

Huijue Group's Home Energy Storage Solution integrates advanced lithium battery technology with solar systems. Ranging from 5kWh to 20kWh, it caters to households of varying sizes.

Get Price

Energy storage cabinet battery production in Timor-Leste

The global energy storage battery cabinet market is experiencing unprecedented growth, with demand increasing by over 500% in the past three years. Battery cabinet storage solutions now account for ...

Get Price

East Timor outdoor communication battery cabinet manufacturer

Home KDST provides safer, smarter, and more efficient outdoor cabinet solutions designed to protect sensitive equipment in any environment. We design and manufacture high-quality custom enclosures ...

Get Price

EAST TIMOR NEW ENERGY LITHIUM BATTERY EXHIBITION

GSL ENERGY's 50 kVA / 100 kWh Solar Battery Storage System is a high-performance all-in-one battery energy storage system solution that integrates a 50 kW hybrid inverter, Li-FePO4 battery ...

Get Price

East Timor Cabinet Energy Storage System Project: Powering a

Discover how East Timor's groundbreaking energy storage initiative

addresses electricity challenges while creating opportunities for renewable energy integration. Explore technical insights, regional ...

Get Price

TIMOR TELECOMMUNICATIONS

Cellular base stations powered by renewable energy sources such as solar power have emerged as one of the promising solutions to these issues. This article presents an overview of the state-of-the-art in ...

Get Price

ISST Electrical And Electronics - ISST Electrical And Electronics

At ISST, we deliver cutting-edge energy, passive infrastructure, and data center solutions that enable smarter, more sustainable growth. Since 2018, we've been committed to supporting critical sectors ...

Get Price

The Unsung Heroes of Connectivity Behind Outdoor Photovoltaic ...

Think of it as a solar power station in a box hardy enough to brave the outdoors, smart enough to keep telecom

equipment online, and green enough to keep your ESG officer happy.

Get Price

Contact Us

For catalog requests, pricing, or partnerships, please visit: https://k3gizycko.pl